Turning expert, leading the world!

Manufacturer:

Zhejiang Turntech CNC Machine Tool Manufacturing Co.,Ltd.

Add: No.315 Lingxu Second Road, Cixi City, Zhejiang Province.

Tel: +86-139-6977-9960 (24h) ; +86-139-5329-7575(24h)

Email: info@turntech-cnc.com

Web: www.turntech-cnc.com

CNC LATHES
TURNING CENTERS

2026

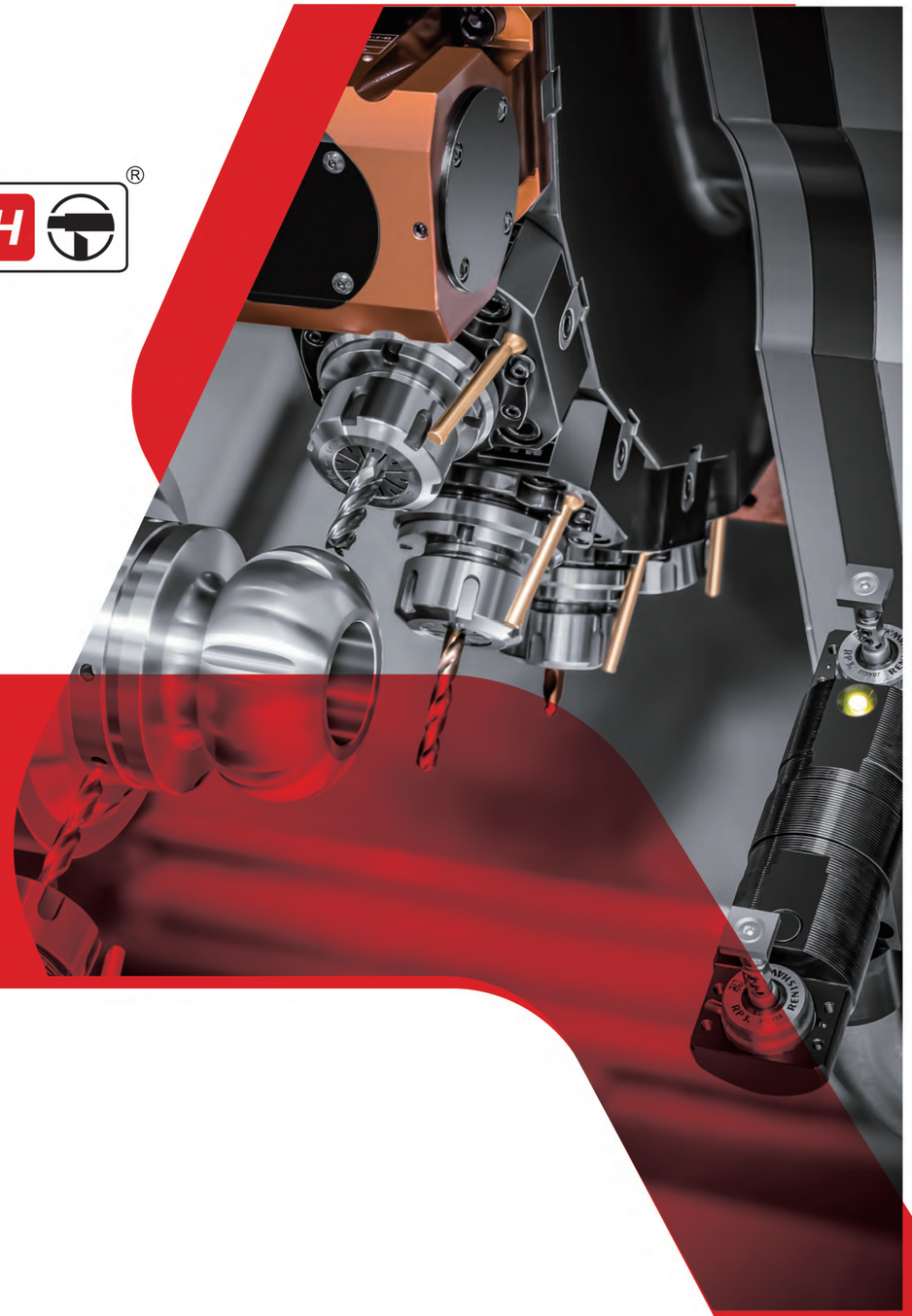

浙江领傲数控机床有限公司

Zhejiang Turntech CNC Machine Tool Manufacturing Co.,Ltd.

ALWAYS ONE STEP AHEAD

Company Profile

Zhejiang Turntech CNC Machine Tool Manufacturing Co., Ltd. is a leading manufacturer of high-quality CNC lathes. Headquartered in Ningbo - a key city in China's dynamic Yangtze River Delta manufacturing hub - the company covers an area of approximately 55,000 square meters, employs over 260 professionals, and produces around 3,600 sets of CNC lathes and turning centers annually.

Equipped with advanced CNC machining centers and high-precision testing equipment, we boast robust manufacturing capabilities and stringent quality control systems.

Jointly developed with South Korean and Japanese engineering teams, we offer a full range of CNC lathes and turning centers, with Swing dia. over bed of 320 - 1000 mm and Turning length of 500 - 5000 mm. Our equipment can be configured with Linear/Box guideways, Mechanical/Electric spindles, Dual spindles, Dual turrets, Y-axis, Hydraulic/Servo programmable tailstocks, Hydraulic/Servo/Power turrets, Hydraulic steady rests, Oil mist collectors, Oil skimmers, Chip conveyors, High - pressure cooling pumps, Tool presetters, Bar feeders, Gantry loading systems, Industrial robots and other accessories, and is compatible with FANUC, SIEMENS, Mitsubishi, SYNTEC, GSK and other mainstream CNC systems.

With 20 years of industry experience, our CNC lathes have earned high international recognition and are exported to more than 70 countries and regions across Europe, North America, South America, Oceania, Southeast Asia, the Middle East and Africa.

Through continuous technological innovation, TURNTECH is committed to delivering superior CNC machining solutions that empower industries worldwide.

Why choose Turntech?

1.Unwavering commitment to international quality standards.
2.Reliable CNC manufacturing - ensuring lifetime accuracy and maximum rigidity.
3.Extensive range of efficient, high-speed, precision CNC lathes and turning centers .
4.Guaranteed timely delivery within agreed-upon timeframes.
5.Significant investment in R&D to deliver innovative solutions with cutting-edge technology.
6.24/7 technical support and comprehensive after-sales service.

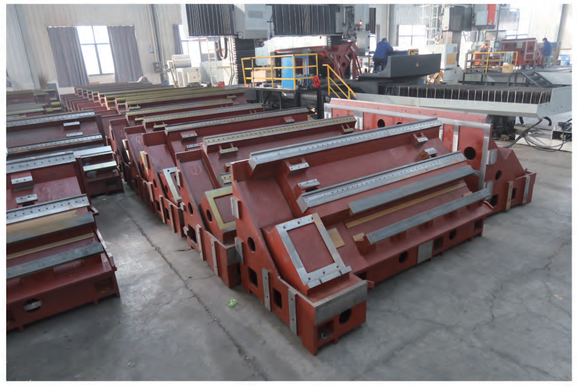

"World-Class Quality, Made in Zhejiang"

We actively align with advanced manufacturing standards from Germany, Switzerland, Japan, and other nations, positioning ourselves as a top-tier domestic and globally advanced enterprise. Guided by our core values of "Ultimate Precision, Sincere Commitment, and Long-Term Vision", we strive for international recognition of our product quality and brand value through high standards, mass production, and global outreach.

Our Machining Equipment:

At TURNTECH, high-quality products begin with advanced machining equipment. Machining is a critical phase in the manufacturing process, transforming raw materials into precise components through turning, milling, grinding, and other processes. To achieve superior accuracy and efficiency, we implement rigorous quality control protocols starting from cast iron, alongside integrating our proprietary CNC turning center manufacturing with internationally advanced machining centers. This integrated strategy ensures uncompromising precision and cutting-edge solutions for every project.

Quality Control:

At TURNTECH, we have over 20 years of experience in CNC lathe manufacturing, with quality embedded in every stage of production. In the fast-evolving machine tool industry, high speed, high precision, high rigidity, and high stability are critical performance factors. For us, ensuring quality is key. This is why we produce more than 80% of the components for our lathes, committed to the philosophy of “in-house” production.

Precision craftsmanship defines our entire production process: from surface finishing (scraping and lapping) to component assembly and final machine integration, every detail undergoes multi-stage verification using advanced metrology tools. We carry out strict full-machine inspections on every lathe before delivery, as this represents the final critical line of defense in safeguarding product quality. Such final inspections guarantee machining accuracy, verify overall machine performance, confirm functional integrity, ensure safe operation for customers, reduce hidden after-sales costs, and uphold our brand reputation.

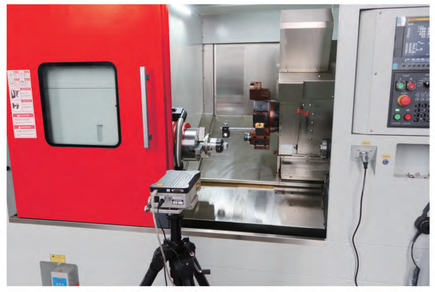

Service:

Lifetime Technical Support for TURNTECH Lathes

Ensure peak productivity and reliability throughout your machine’s lifecycle with our comprehensive support programs.

Key Services Include:

1.Free factory–based training

Hands-on training sessions at our facility to maximize operator proficiency.

2.On–site installation & operator training

Factory-certified technicians provide full installation and customized training at your plant.

3.24/7 Remote support

Instant access to our expert online team via remote connectivity for real-time troubleshooting.

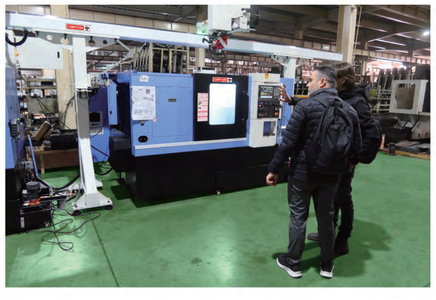

CNC Slant Bed Lathes

MODEL		UNIT	SBL–300		
Capacity	Max. swing over bed	mm	320		
	Max. turning dia.	mm	170	100	160
	Max. turning length	mm	270	220	220
	Bar dia.	mm	Φ40	Φ40	Φ40
Spindle	Taper		A2–5	A2–5	A2–5
	Bore	mm	Φ52	Φ52	Φ52
	Speed	rpm	50–3500	50–3000	50–4000
	Motor power	kW	5.5	5.5	5.5
	Chuck size	Inch	6"	6"	6"
Feeding	X/Z axis travel	mm	170/280	330/260	165/250
	X/Z axis rapid speed	m/min	25/25	25/25	25/25
Turret	Type	T	Hydraulic servo, 8/12	Gang tool, 4	Power, 12 (BMT40)
	Tool size	mm	20x20/Φ25	20x20/Φ25	20x20/Φ25/ER20
Tailstock	Type		Hydraulic, MT.4	––	Hydraulic, MT.4
	Sleeve dia./travel	mm	Φ65; 70	––	Φ65; 70
Others	Overall dimensions	mm	2120x1675x1900	1950x1520x1800	2120x1675x1900
	Weight	kg	2150	2000	2300

CNC Slant Bed Lathes

1. This CNC lathe, designed with FEA, integrates mechanical, electrical and hydraulic systems, featuring high precision, speed and rigidity to effectively improve production efficiency.
2. SBL-300 & SBL-400 (45°), SBL-500 (35°) adopt an integral slant bed structure, which brings the workpiece closer to the operator and ensures smooth chip removal. The bed is cast from high-quality resin sand, providing exceptional rigidity and shock resistance.
3. Roller linear guideways greatly enhance the machine's accuracy and stability.
4. The spindle is equipped with precision double-row cylindrical roller bearings, improving accuracy and rigidity.
5. The spindle sleeve features a heat-dissipation design to reduce temperature rise.
6. Servo spindle, hydraulic through-hole chuck, and hydraulic servo turret make it ideal for heavy-duty turning.
7. Hydraulic tailstock with high precision, high efficiency, and stable performance.
8. X and Z-axis servo motors are connected to ball screws via elastic couplings, ensuring high precision and rigidity.
9. Full enclosure protects all electrical components from water, oil, and metal chips.

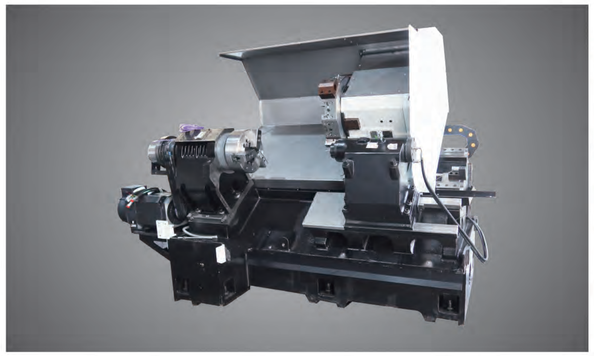

SBL–400			SBL–500		
400			500		
320			430	375	430
450	420	1000	650	520	1000
Φ50	Φ74	Φ74	Φ74		
A2–6	A2–8	A2–8	A2–8		
Φ62	Φ86	Φ86	Φ86		
50–3000	50–2500	50–2500	60–2500		
11	11	11	15		
8"	10"	10"	10"		
200/480	200/425	210/1100	240/680	190/530	240/1100
25/25	25/25	25/25	25/25	25/25	25/25
Hydraulic servo, 8/12	Hydraulic servo, 8/12	Hydraulic servo, 12	Hydraulic servo, 12	Power turret, 12(BMT65)	Hydraulic servo, 12
25x25/Φ40			25x25/Φ40	25x25/Φ40/ER40	25x25/Φ40
Hydraulic, MT.5			Hydraulic, MT.5		
Φ88; 80			Φ80; 100		
2620x1880x1870	2620x1880x1870	4300x1930x1870	3320x2000x2020	3320x2000x2020	3600x2000x2020
3500	3550	4500	5250	5300	6800

CNC Slant Bed Lathes

1. An ergonomic design with a one-piece 30° slant bed, cast from high-quality resin sand for exceptional rigidity, ideal for heavy-duty turning.
2. The bed guideway adopts a high-low rail design and is integrally cast with resin sand. Through multiple aging and heat treatment processes, the machine maintains optimal precision and rigidity over the long term.
3. SBL-460: motorized spindle, 50–5000 rpm, high speed and high efficiency, suitable for short and disc-shaped workpieces. Standard with turret, gang tool optional.
   SBL-580: standard mechanical spindle. Optional: motorized spindle, 50–4500 rpm, 18.5 kW motor power.
4. Roller linear guideways enable high-precision turning, reduce friction and thermal deformation, improve machining accuracy, and ensure long-term stable cutting performance.
5. X and Z-axis servo motors are directly connected to ball screws via flexible couplings, with screws fixed at both ends.
6. Integrated hydraulic servo turret or power turret, with high positioning accuracy and fast tool change.
7. Hydraulic pressure monitoring and adjustment are easily operated via knobs on the front panel, convenient and efficient.
8. Fully enclosed guideways, with coolant tank and chip conveyor separated from the main unit, to avoid heat-induced accuracy loss during cutting.

CNC Slant Bed Lathes

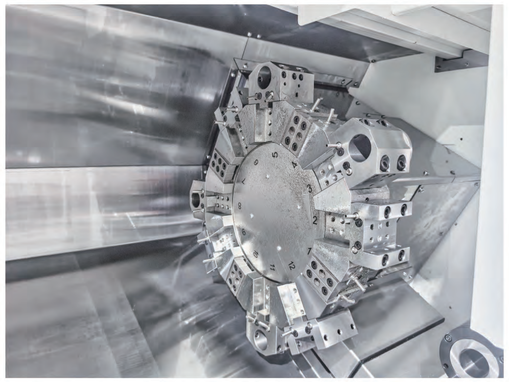

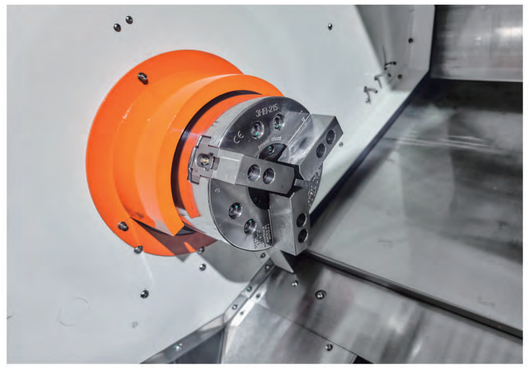

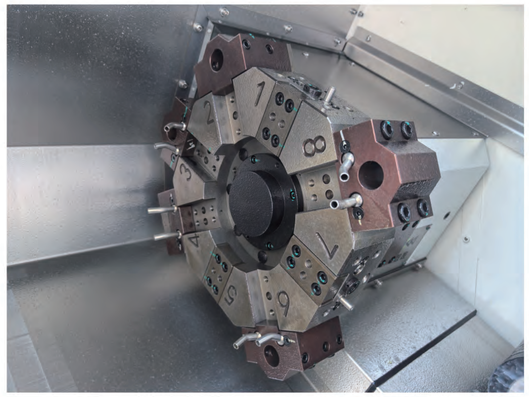

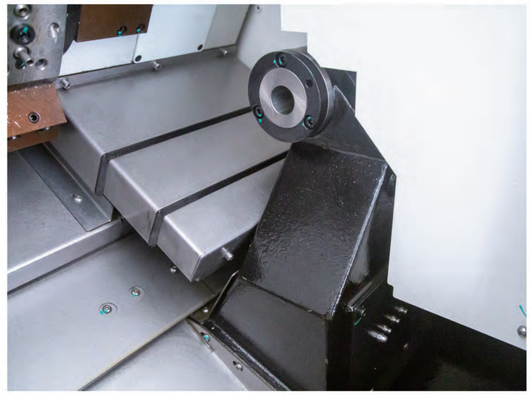

MODEL		UNIT	SBL–460		SBL–580	
Capacity	Max. swing over bed	mm	460		580	
	Max. turning dia.	mm	310	230	260	260
	Max. turning length	mm	300	290	320; 520	270; 470
	Bar dia.	mm	Φ45		Φ50 (opt. Φ62)	
Spindle	Taper		A2–5		A2–6	
	Bore	mm	Φ56		Φ62 (opt. Φ75)	
	Speed	rpm	50–5000		50–3000	
	Motor power	kW	12.3		11	
	Chuck size	Inch	6”		8”	
Feeding	X/Z axis travel	mm	155/362	155/285	190/400,600	190/350,550
	X/Z axis rapid speed	m/min	25/30	25/25	30/30	
Turret	Type	T	Hydraulic servo, 8	Power, 12(BMT40)	Hydraulic servo, 12	Power, 12 (BMT55)
	Tool size	mm	25x25/Φ32	25x25/Φ25/ER20	25x25/Φ40	25x25/Φ40/ER32
Tailstock	Type	mm	Servo programmable, MT.4, Φ65		Hydraulic, MT.5, Φ74	
	Travel	mm	350	310	250	450
Others	Overall dimensions	mm	1840x1700x1710	1990x1700x1710	2570/2770x1820x1920	
	Weight	kg	2600	2650	3800; 4200	

CNC Turning centers

MODEL		UNIT	TC-500MY	TC-500MSY	
Capacity	Max. swing over bed	mm	500	500	
	Max. machining dia.	mm	240	240	
	Max. turning length	mm	345	330	
	Bar dia.	mm	Φ45	Φ45	--
Spindle	Taper		A2-5	A2-5	A2-4
	Bore	mm	Φ56	Φ56	Φ36
	Speed	rpm	50-4500	50-4500	50-5000
	Motor power	kW	12.3	12.3	9.5
	Chuck size	Inch	6"	6"	5"
Feeding	X/Y/Z axis travel	mm	120/±35/345	120/±35/330	
	X/Y/Z axis rapid speed	m/min	25/10/25	25/10/25	
Turret	Type	T	Power, 12 (BMT45)	Power, 12 (BMT45)	
	Tool size	mm	25x25/Φ25/ER25	25x25/Φ25/ER25	
Tailstock	Type	mm	Servo programmable, MT.4, ϕ65	--	
	Travel	mm	390	Sub spindle: 380	
Others	Overall dimensions	mm	2200x1900x1800	2200x1900x1800	
	Weight	kg	3000	3100	

CNC Turning centers

1. Powerful, compact, reliable. A classic Y-axis turning center with power turret and one of China's best-selling CNC lathes.
2. An ergonomic design with a one-piece 30° slant bed, cast from high-quality resin sand for exceptional rigidity, ideal for heavy-duty turning.
3. The bed guideway adopts step-type design and is integrally cast with resin sand. Through multiple aging and heat treatment processes, the machine maintains optimal precision and rigidity over the long term.
4. Motorized spindle, max. 5000 rpm, high speed and high efficiency, suitable for short and disc-shaped workpieces.
5. Roller linear guideways enable high-precision turning, reduce friction and thermal deformation, improve machining accuracy, and ensure long-term stable cutting performance.
6. X and Z-axis servo motors are directly connected to ball screws via flexible couplings, with screws fixed at both ends.

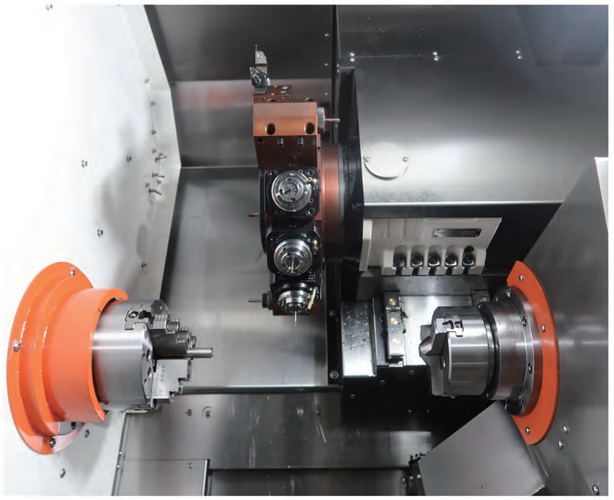

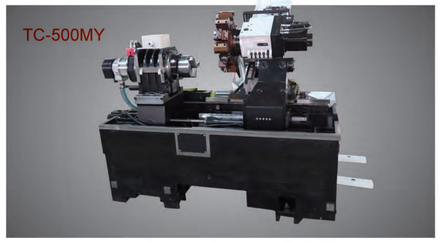

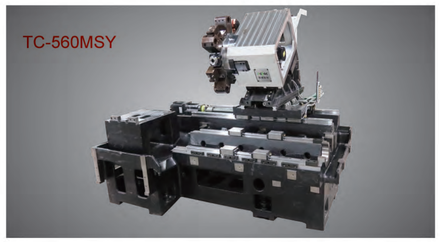

TC-560MY(A2-6)	TC-560MSY(A2-6)		TC-560MY(A2-8)	TC-560MSY(A2-8)	
560	560		560	560	
350	300		300	300	
560	500		500；800	500	
Φ50	Φ50	Φ45	Φ74	Φ74	Φ45
A2-6	A2-6	A2-5	A2-8	A2-8	A2-6
Φ62	Φ62	Φ55	Φ86	Φ86	Φ55
50-4000	50-4000	50-5000	50-4000	50-4000	50-5000
17.2	17.2	10.8	26.5	26.5	11
8"	8"	6"	10"	10"	8"
180/±50/570	180/±50/500		180/±50/550;800	180/±50/560	
30/10/30	30/10/30		30/10/30	30/10/30	
Power, 12 (BMT55)	Power, 12 (BMT55)		Power, 12 (BMT55)	Power, 12 (BMT55)	
25x25/Φ40/ER32	25x25/Φ40/ER32		25x25/Φ40/ER32	25x25/Φ40/ER32	
Servo programmable, MT.5	--		Servo programmable, MT.5	--	
620	Sub spindle: 500		600; 860	Sub spindle: 500	
2800x1900x2000	2800x1900x2000		2800/3000x1900x2000	2800x1900x2000	
4500	5000		4850; 5000	5050	

CNC Turning centers

MODEL		UNIT	TC-600 / TC-600M / TC-600MY			
Machining capacity	Max. swing over bed	mm	600			
	Max. machining dia.	mm	390			
	Max. turning length	mm	600; 800; 1000			
	Bar dia.	mm	Φ55	Φ65	Φ75	Φ91
Spindle/ Sub-spindle	Taper		A2-6 Spindle	A2-6 Spindle	A2-8 Spindle	A2-11 Spindle
	Bore	mm	Φ66	Φ79	Φ86	Φ105
	Speed	rpm	4200	4200	3500	2000
	Spindle power	kW	11/15	11/15	11/15	11/15
	Chuck size	Inch	8" /10"	8" /10"	10" /10"	12" /15"
Feed rate	X axis travel	mm	260			
	Y axis travel	mm	±50			
	Z axis travel	mm	580; 830; 1080			
	X,Z-axes rapid speed	m/min	24			
Turret	Type	T	Servo turret 12; Power turret 12 (BMT55)			
	Tool size	mm	25x25/Φ40			
Tailstock	Tailstock taper		Hydraulic or Servo programmable type, MT.5			
	Tailstock travel	mm	690; 940; 1190			
Others	Overall dimensions	mm	2950/3200/3600x2040x2200			
	Weight	kg	3900; 4400; 5000			

CNC Turning centers

1. High rigidity & stable structure for superior machining performance

The bed structure is designed and stress-analyzed using FEM. It adopts a 30° low-center slant bed with reinforced ribs to prevent twisting and deformation, ensuring excellent rigidity and stability.

2. High-efficiency spindle

The headstock and spindle are manufactured under temperature-controlled conditions, assembled and tested in a cleanroom. The heavy-duty cartridge-type spindle is supported by angular contact ball bearings at the front and double-row roller bearings at the rear, reducing noise while enhancing rigidity and machining efficiency.

3. X/Z axis feed system

The saddle moves along the bed in the Z-axis, and the slide carries the turret in the X-axis. Both are driven by servo motors connected to ball screws via couplings. High-precision Japanese/Taiwan ball screws ensure accurate transmission.

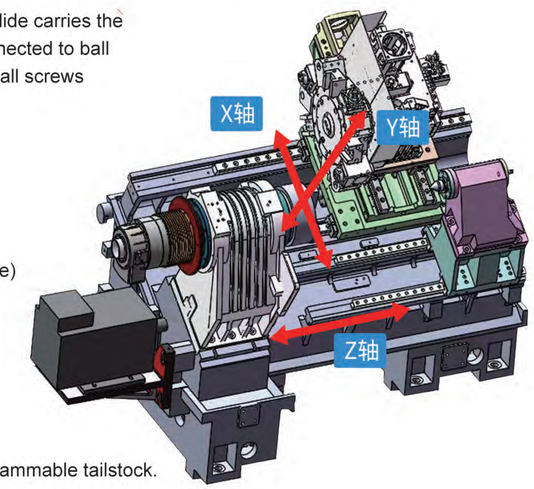

4. Turret & model configuration

- TC-600: Equipped with servo turret.
- TC-600M: Equipped with power turret.
- TC-600MY: Equipped with power turret with Y-axis.
- TC-600MSY is equipped with power turret, Y-axis and sub-spindle. Its sub-spindle (motorized spindle) is available in 2 bore sizes: Φ56, Φ66 mm, and can be flexibly matched with A2-6/8/11 mechanical spindles or motorized spindles. This extends the machining range and provides users with diverse processing solutions. And the main spindle is available in 4 bore sizes: Φ66, Φ79, Φ86, Φ105 mm.
- All models can be equipped with hydraulic or servo programmable tailstock.

5. Full linear guideway structure

Box way is optional for the tailstock.

MODEL		UNIT	TC-600MSY	
Machining capacity	Max. swing over bed	mm	600	
	Max. machining dia.	mm	390	
	Max. turning length	mm	600; 800; 1000	
	Bar dia.	mm	Φ45	Φ55
Spindle/ Sub-spindle	Taper		A2-5 Sub-spindle	A2-6 Sub-spindle
	Bore	mm	Φ56	Φ66
	Speed	rpm	5500	4300
	Spindle power	kW	12.5	22
	Chuck size	Inch	6"	8"
Feed rate	X axis travel	mm	260	
	Y axis travel	mm	±50	
	Z axis travel	mm	580; 830; 1080	
	X,Z-axes rapid speed	m/min	24	
Turret	Type	T	Power turret 12 (BMT55)	
	Tool size	mm	25x25/Φ40	
Tailstock	Tailstock taper		--	
	Tailstock travel	mm	Sub-spindle: 690; 940; 1190	
Others	Overall dimensions	mm	2950/3200/3600x2040x2200	
	Weight	kg	4000; 4500; 5150	

CNC Turning Centers

1. Integral 45° slant bed with heavy ribs minimizes torsion and thermal deformation, ensuring high rigidity, heavy cutting capacity, and stability.
2. 4-axis simultaneous machining with dual spindles and dual turrets. Under multi-channel CNC control, it enables automatic part reversal, simultaneous roughing/finishing, and independent spindle operations.
3. Dual feed systems (two sets of X/Y/Z axes) with hard-rail orthogonal Y-axes, delivering strong milling performance.
4. Low resonance & high precision: Max resonance <5% during dual-side machining; Static docking accuracy 0.005mm, synchronous docking 0.01mm, meeting most customer needs.
5. Opposing dual spindles allow simultaneous left/right machining, drastically reducing cycle time.
6. Upper/lower turrets with milling (Y-axis on upper turret) support up to 48 tools.
7. Versatile production: From small-batch/multi-variety to high-volume, all operations completed in one clamping.

CNC Turning Centers

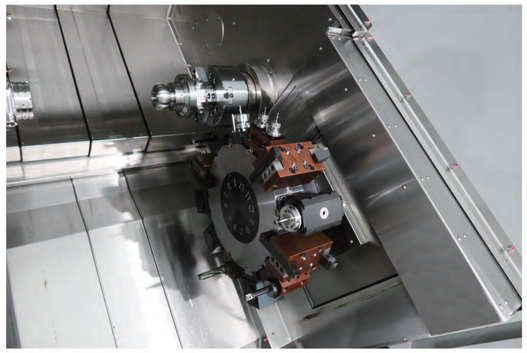

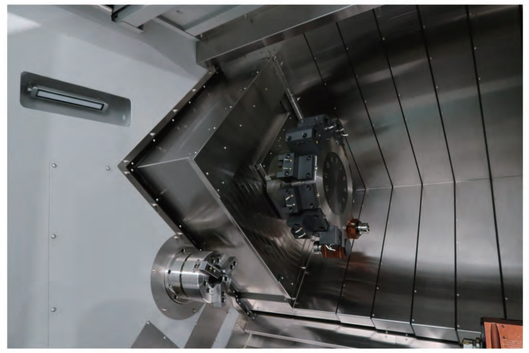

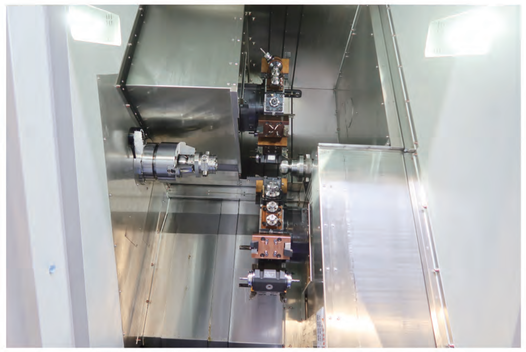

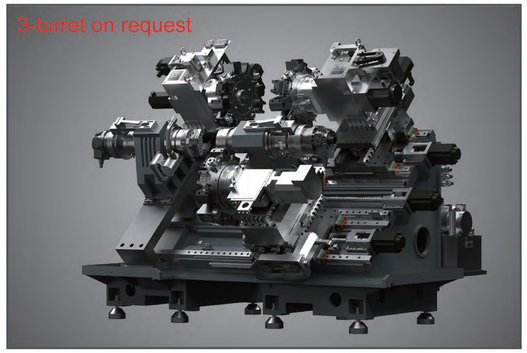

MODEL		UNIT	TC-600MMSY			
Machining capacity	Max. swing over bed	mm	600			
	Max. machining dia.	mm	260			
	Max. turning length	mm	600		1000	
	Bar dia.	mm	Φ51	Φ45	Φ65	Φ45
Spindle/ Sub-spindle	Taper		A2-6	A2-5	A2-6	A2-5
	Bore	mm	Φ66	Φ56	Φ79	Φ56
	Speed	rpm	4000	4500	4000	4500
	Spindle power	kW	11/15	18	11/15	18
	Chuck size	Inch	8"	6"	8"	6"
Feed rate	X1/X2 axis travel	mm	220/160		220/160	
	Y axis travel	mm	±50		±75	
	Z1/Z2/Z3 axis travel	mm	600		1000	
	X,Y,Z-axes rapid speed	m/min	24		24	
Turret	Type	T	Power turret 12 (BMT55)		Power turret 12 (BMT65)	
	Tool size	mm	25x25/Φ40		25x25/Φ40	
	0° /90° live tool heads	rpm	ER32/3000		ER40/3000	
Others	Overall dimensions	mm	5600x2800x2400		6000x2800x2400	
	Weight	kg	9000		12000	

CNC Turning Centers

1. High rigidity & high–stability structure

45° Slant Bed with Low Center of Gravity engineered via FEM analysis. Reinforced ribs resist torsion and deformation, ensuring exceptional rigidity and machining stability.

2. Rigid spindle headstock

Machined from high-density cast iron with external ribs for maximum robustness. Double-row roller bearings guarantee high-rigidity power transmission and efficiency.

3. Hydraulic programmable tailstock

Full automation via M-code: Hydraulic motor drives rack-and-pinion for whole movement; Hydraulic cylinder actuates sleeve and locks the body. Provides seamless, automated positioning.

4. Ergonomic mobile control panel

Freely positionable design delivers optimal ergonomics. Brings the operator closer to the workpiece for precise tool setting, significantly improving first-piece efficiency.

5. Optional sub–spindle

A2-6 Motorized Spindle: 22.15kW / 4000rpm. Φ66mm through-hole, supports Φ55mm bar stock, and accommodates 8"/10" chucks.

6. Advanced options

Linear scales, Servo-programmable tailstock (M-code positioning), Hydraulic-servo steady rest, and Dual chucks for high-precision pipe threading etc.

7. Dual rail system options

Standard: Full linear guideways for high speed and precision. The tailstock features high-frequency induction hardened, widened contact surfaces hand-scraped for superior rigidity.

Optional: Premium inlaid steel ways for exceptional wear resistance and precision retention.

8. Primarily designed for large–scale pipe and shaft machining

Suited for manufacturing complex components in oil & gas pipelines, flange production, construction machinery hydraulic parts, as well as the aerospace and shipbuilding industries.

CNC Turning Centers

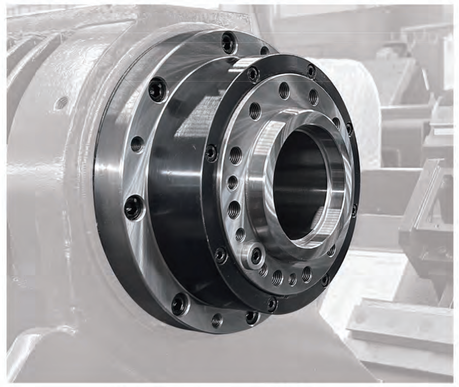

Max. Spindle bore Φ105

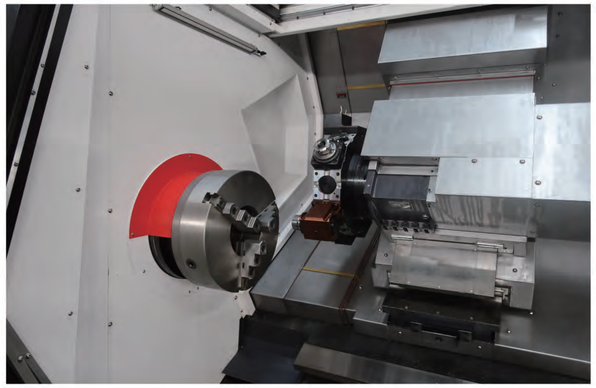

Turret

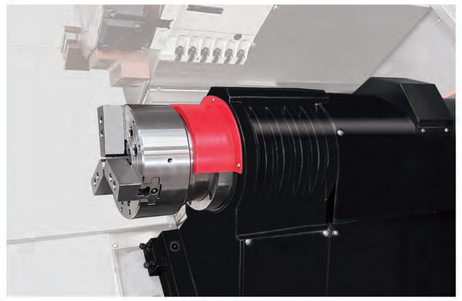

Sub–spindle

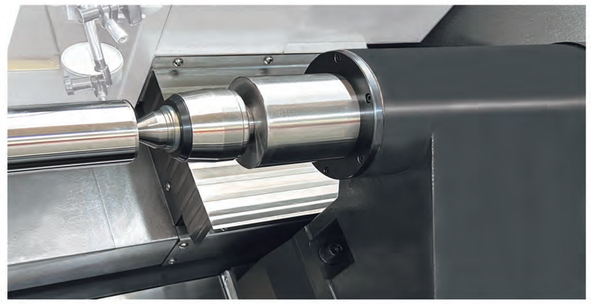

Tailstock

MODEL		UNIT	TC–650 / TC–650M / TC–650MY	TC–750 / TC–750M / TC–750MY	
Machining capacity	Max. swing over bed	mm	650	750	
	Max. machining dia.	mm	400	500	
	Max. turning length	mm	1100; 1600; 2100	1100; 1600; 2100	
	Bar dia.	mm	Φ74	Φ90	Φ120
Spindle	Taper		A2–8	A2–11	A2–11
	Bore	mm	Φ86	Φ105	Φ132
	Speed	rpm	3000	2000	1500
	Spindle power	kW	22	30	30
	Chuck size	Inch	10" /12" /15"	10" /12" /15"	
Feed rate	X axis travel	mm	300	300	
	Y axis travel	mm	±50	±50	
	Z axis travel	mm	1100; 1600; 2100	1100; 1600; 2100	
	X,Y,Z–axes rapid speed	m/min	24	24	
Turret	Type	T	Servo turret 12; Power turret 12 (BMT55)	Servo turret 12; Power turret 12 (BMT55)	
	Tool size	mm	25x25/Φ40	25x25/Φ40	
Tailstock	Taper		Hydraulic programmable type, MT.5	Hydraulic programmable type, MT.5	
	Sleeve dia./travel	mm	Φ100; 150	Φ100; 150	
	Tailstock travel	mm	1100; 1600; 2100	1100; 1600; 2100	
Others	Overall dimensions	mm	3600/4300/4800x2000x2250	3600/4300/4800x2000x2250	
	Weight	kg	5500; 6300; 7500	5600; 6400; 7600	

CNC Turning centers

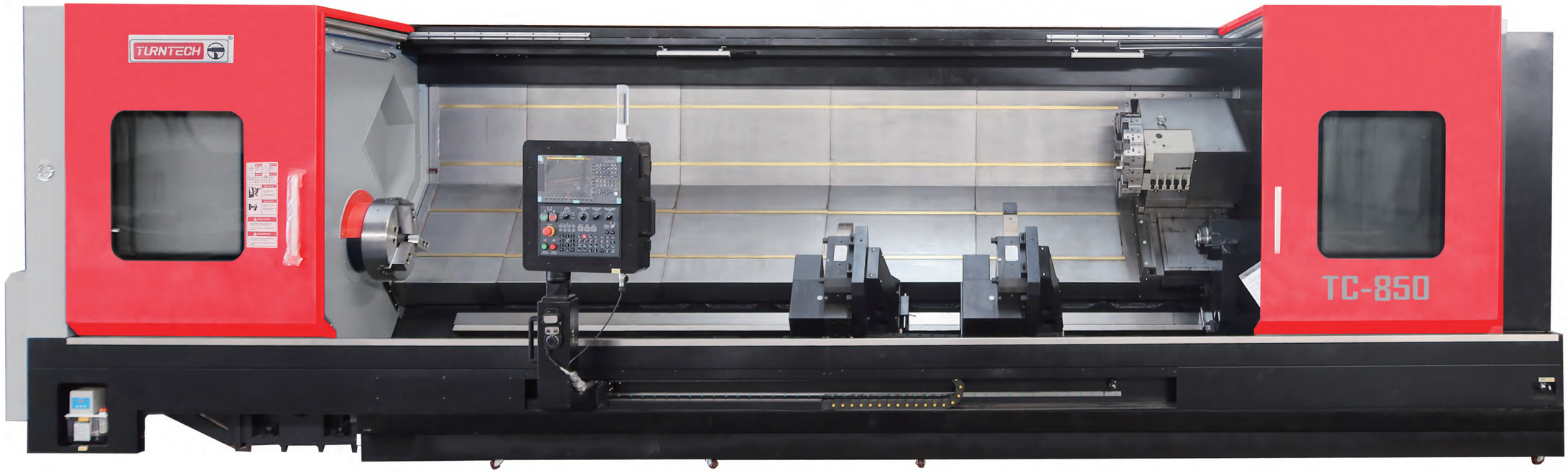

1. High rigidity & stable structure

FEM-designed 45° slant bed with low center of gravity. Reinforced ribs resist torsion and deformation, ensuring maximum rigidity and machining stability.

2. Rigid spindle headstock

High-density cast iron structure with external ribs. Double-row roller bearings deliver high-rigidity power transmission, enabling heavy-duty cutting performance. The spindle is available in 5 specifications (Φ86-Φ220mm), significantly expanding the machining range and offering users versatile operational solutions.

3. Hydraulic fully automatic programmable tailstock

M-code controlled full automation: Hydraulic motor drives rack-and-pinion for whole movement; Hydraulic cylinder actuates sleeve and locks the body.

4. Advanced options

Linear scales, BF gear box, high-pressure through-spindle coolant, servo-programmable tailstock (M-code), hydraulic-servo programmable steady rest, dual chucks for pipe threading etc.

5. Optional sub–spindle

A2-6 motorized spindle: 22.15kW / 4000rpm. Φ66mm through-hole, Φ55mm bar capacity, 8”/10” chucks.

6. Rail system options

Standard: Full linear guideways. Tailstock uses high-frequency induction hardened ways with widened surfaces and hand-scraped finishes for maximum rigidity.

Optional: Hardened ways or inlaid steel guideways for exceptional wear resistance and precision retention.

7. Applications

Suitable for large pipe and shaft machining. Ideal for oil & gas pipelines, flanges, construction machinery hydraulic parts, aerospace, and shipbuilding components.

CNC Turning centers

MODEL		UNIT	TC–800 / TC–800M / TC–800MY		TC–850 / TC–850M / TC–850MY		
Machining capacity	Max. swing over bed	mm	780		850		
	Max. machining dia.	mm	500		630		
	Max. turning length	mm	1000;1500;2000;3000;4000;5000				
	Bar dia.	mm	Φ75	Φ90	Φ120	Φ166	Φ220
Spindle	Taper		A2–8	A2–11	A2–11	A2–15	A2–15
	Bore	mm	Φ86	Φ105	Φ132	Φ181	Φ220
	Speed	rpm	3000	2000	1800	1000	800
	Spindle power	kW	22	30	30	30	30
	Chuck size	Inch	12” /15” /18” /21” /24”				
Feed rate	X axis travel	mm	350				
	Y axis travel	mm	±75				
	Z axis travel	mm	1000;1500;2000;3000;4000;5000				
	X,Y,Z–axes rapid speed	m/min	16/10/16				
Turret	Type	T	Servo turret 12; Power turret 12 (BMT65)				
	Tool size	mm	32x32/Φ50				
Tailstock	Taper		Hydraulic programmable type, MT.5/MT.6				
	Sleeve dia. & travel	mm	Φ150/Φ160; 180				
	Tailstock travel	mm	1100;1600;2100;3100;4100;5100				
Others	Overall dimensions	mm	4000/4550/5500/6700/7600/8600x3000x2400				
	Weight	kg	7600;8800;9800;12500;14800;17000				

CNC Turning centers

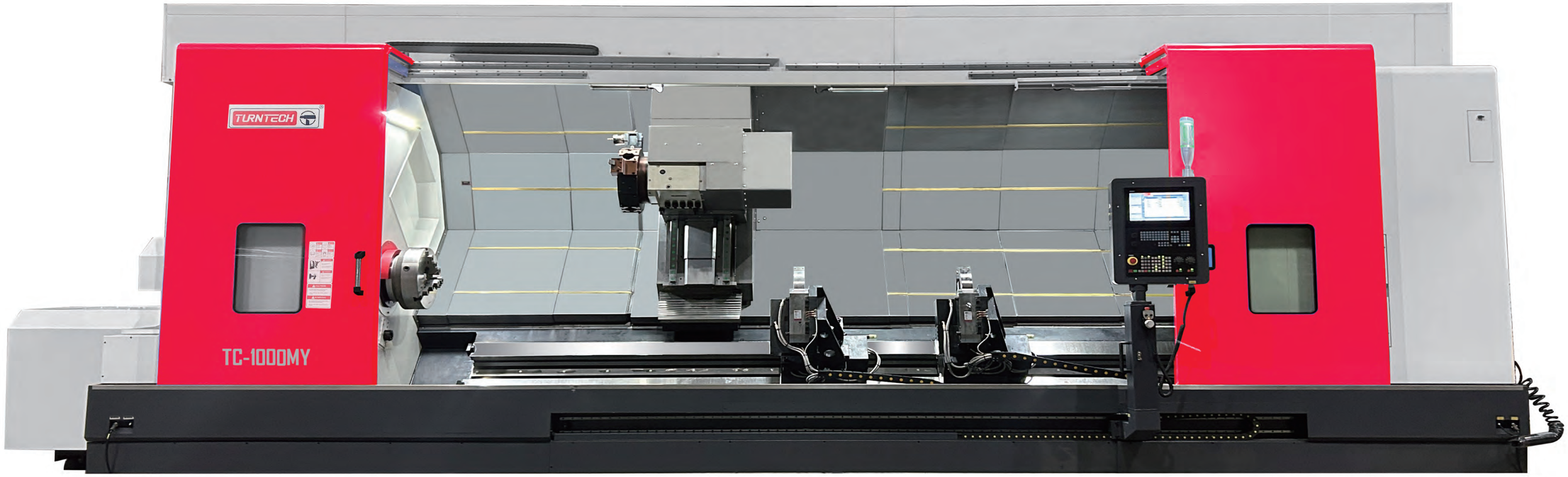

1. High rigidity & stable structure

FEM-designed 45° slant bed with low center of gravity. Reinforced ribs resist torsion and deformation, ensuring maximum rigidity and machining stability.

2. Rigid spindle headstock

High-density cast iron structure with external ribs. Double-row roller bearings deliver high-rigidity power transmission, enabling heavy-duty cutting performance. The spindle is available in 5 specifications (Φ132-Φ375mm), significantly expanding the machining range and offering users versatile operational solutions.

3. Hydraulic fully automatic programmable tailstock

M-code controlled full automation: Hydraulic motor drives rack-and-pinion for whole movement; Hydraulic cylinder actuates sleeve and locks the body.

4. Advanced options

Linear scales, BF gear box, high-pressure through-spindle coolant, servo-programmable tailstock (M-code), hydraulic-servo programmable steady rest, dual chucks for pipe threading etc.

5. Rail system options

Standard: Full linear guideways. Tailstock uses high-frequency induction hardened ways with widened surfaces and hand-scraped finishes for maximum rigidity.

Optional: Hardened ways or inlaid steel guideways for exceptional wear resistance and precision retention.

6. Applications

Suitable for large pipe and shaft machining. Ideal for oil & gas pipelines, flanges, construction machinery hydraulic parts, aerospace, and shipbuilding components.

TURNING EXPERT, LEADING THE WORLD! TURNTECH

CNC Turning centers

MODEL		UNIT	TC-1000 / TC-1000M / TC-1000MY				
Machining capacity	Max. swing over bed	mm	1200				
	Max. machining dia.	mm	1000				
	Max. turning length	mm	1000;1500;2000;3000;4000;5000				
	Bar dia.	mm	Φ120	Φ166	Φ220	Φ320	Φ375
Spindle	Taper		A2-11	A2-15	A2-20	A2-25	A2-25
	Bore	mm	Φ132	Φ181	Φ220	Φ320	Φ375
	Speed	rpm	1800	1400	1000	800	750
	Spindle power	kW	55	55	75	75	75
	Chuck size	Inch	18" /21" /24" /24" /32"				
Feed rate	X axis travel	mm	500				
	Y axis travel	mm	±100				
	Z axis travel	mm	1000;1500;2000;3000;4000;5000				
	X,Y,Z-axes rapid speed	m/min	16/10/16				
Turret	Type	T	Servo turret 12; Power turret 12 (BMT85)				
	Tool size	mm	32x32/Φ50				
Tailstock	Taper		Hydraulic programmable type, MT.6				
	Sleeve dia. & travel	mm	Φ180; 200				
	Tailstock travel	mm	1100;1600;2100;3100;4100;5100				
Others	Overall dimensions	mm	5000/5900/6700/7990/9040/10240x3260x3940				
	Weight	kg	10000;13000;18000;23000;28000;34000				

CNC 5-axis Vertical Turning & Milling Machining Centers

1. The overall structure and key components have all undergone finite element analysis to avoid stress concentration,reduce subsequent deformation, and ensure a reasonable mechanical structure.
2. The machine bed is made of HT300 castings, strong rigidity and high hardness.
3. The worktable is centrally positioned with strong load-bearing capacity, preventing imbalance caused by the superposition of worktables.
4. The base has a large span and adopts HIWIN large ball screws + long-slider roller linear guideways, which can meet the requirements of high speed, high precision and heavy load.
5. Milling head (B-axis): VTM-400/630, precision cam swing head. VTM-550, DD motor-driven, hydraulically locked, turntable-bearing supported. Equipped with a high-power, small-volume spindle, which has less interference, large torque and can swing at any angle.
6. Milling is performed on the left and turning on the right, with the turning and milling functions separated. This improves the performance of the machine tool and results in a lower failure rate compared to machines with a single spindle for both turning and milling.
7. Control system: Standard SYNTEC, optional FANUC, SIEMENS, GSK and HNC.

CNC 5-axis Vertical Turning & Milling Machining Centers

MODEL		UNIT	VTM–400	VTM–550	VTM–630
Max. swing over bed		mm	400	550	630
Max. turning height		mm	300	400	500
Max. machining dia.		mm	400	500	630
Turning spindle nose			A2–6	A2–8	A2–11
Turning spindle speed		rpm	2000	3000	400
Turning spindle motor power		kW	17	22	22
Hydraulic chuck dia.		Inch	8"	10"	15"
Milling spindle type			BT40	HSK–A63	BT40
Milling spindle max. speed		rpm	10000	10000	8000
Milling spindle motor power		kW	30	30	18.5
B axis max. speed		rpm	30	30	30
B axis travel		°	–95—20	–10—100	–95—20
X/Y/Z–axis rapid speed		m/min	36/36/36	24/24/24	30/30/30
X/Y/Z–axis travel		mm	700x400x550	1100x400x700	1200x630x800
Milling tool magazine	Tool qty	T	24	24	24
	Max. dia./length; Weight	mm; kg	Φ80/200; 6	Φ80/300; 8	Φ80/200; 6
Turning turret	Tool qty	T	8, hydraulic servo	8, hydraulic servo	8, hydraulic servo
	Size	mm	25x25/Φ32	25x25/Φ32	25x25/Φ32
Overall dimensions		mm	3200x2500x2500	4100x1848x2744	4500x2980x3100
Weight		kg	5800	9800	11500

FLG Series CNC Lathe Body (Linear Guideway)

Swing over bed: 400 – 1000 mm
Turning length: 400 – 5000 mm

Main Configurations:
Linear guideway, mechanical spindle, motorized spindle, servo turret, power turret, with Y-axis, with sub-spindle, hydraulic tailstock, servo programmable tailstock, hydraulic steady rest etc.

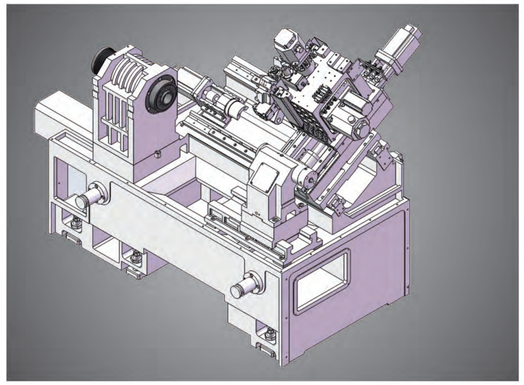

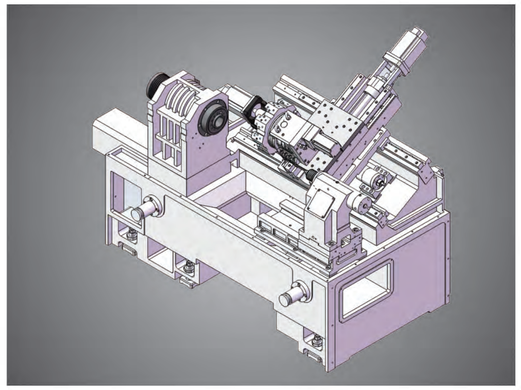

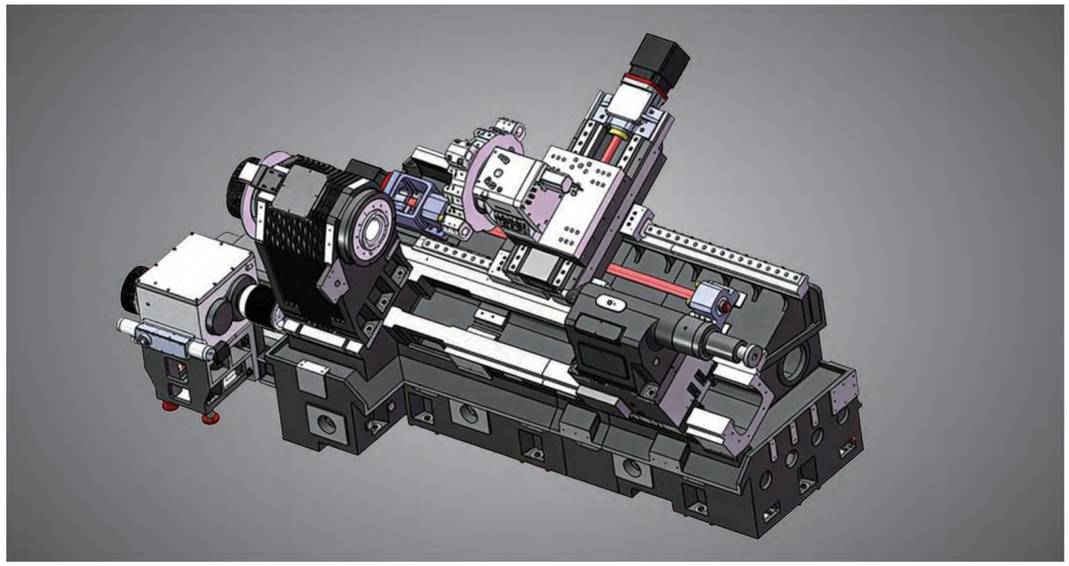

MODEL	UNIT	FLG–500–BODY	FLG–560–BODY	FLG–800–BODY
Max. swing over bed	mm	500	560 (opt.650)	800
Max. machining dia.	mm	250	460	620
Max. turning length	mm	260	540	1000; 1500; 2000
Spindle taper and bore	mm	A2–5, Φ56	A2–5, Φ66	A2–11, Φ102 (opt.A2–15, Φ157)
Spindle speed	rpm	4500	4000	2000
Weight	kg	1450	2000	5500; 6400; 7200

FBW Series CNC Lathe Body (Box Way)

Swing over bed: 500 – 1000 mm
Turning length: 500 – 5000 mm

Main Configurations:
Hard guideway, mechanical spindle, motorized spindle, servo turret, power turret, with Y-axis, with sub-spindle, hydraulic tailstock, servo programmable tailstock, hydraulic steady rest etc.

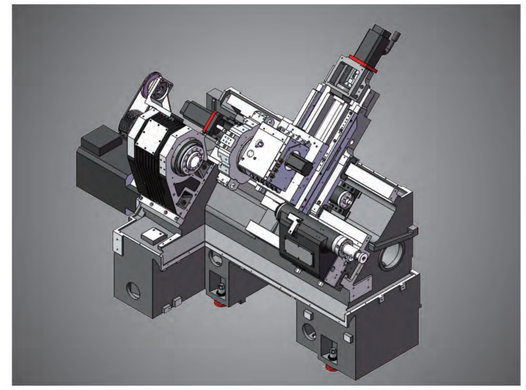

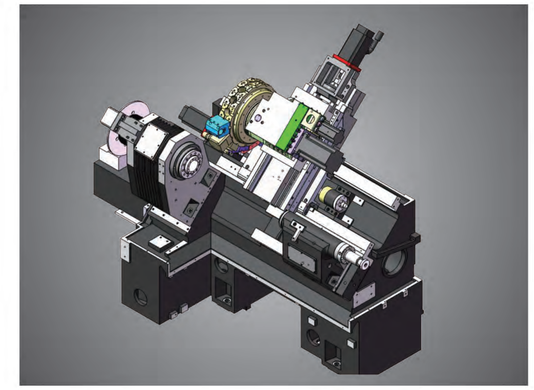

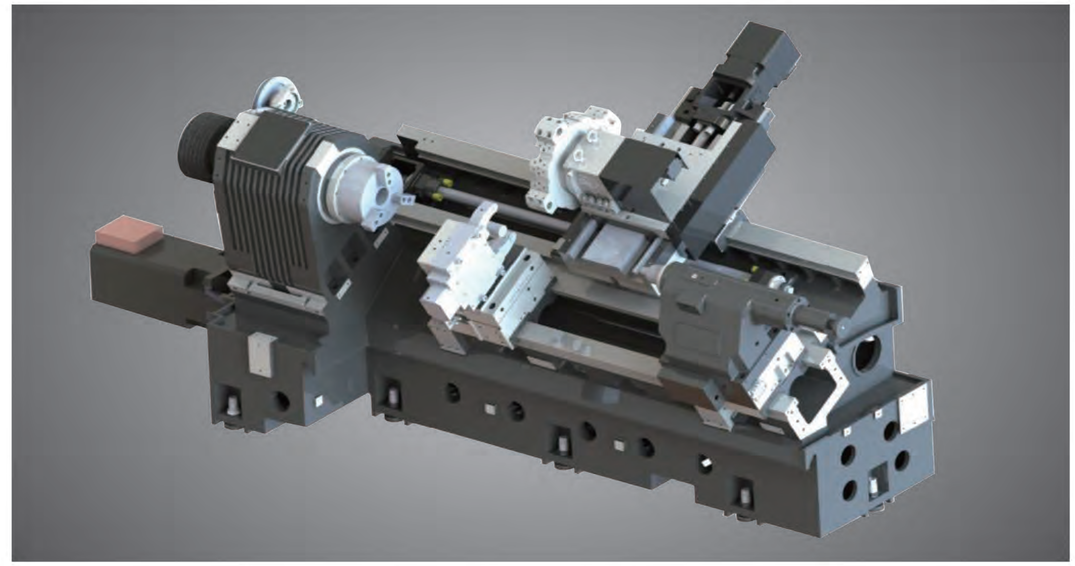

MODEL	UNIT	FBW–500–BODY	FBW–600–BODY	FBW–700–BODY	FBW–800–BODY
Max. swing over bed	mm	500	600	700	800
Max. machining dia.	mm	400	510	560	620
Max. turning length	mm	420	550	1100	1000; 1500
Spindle taper and bore	mm	A2–6, Φ61	A2–6, Φ87	A2–8, Φ87	A2–11, Φ102
Spindle speed	rpm	4000	3000	3000	2000
Weight	kg	2300	3500	4500	5600; 6800

Main Configurations (Standard & Optional)

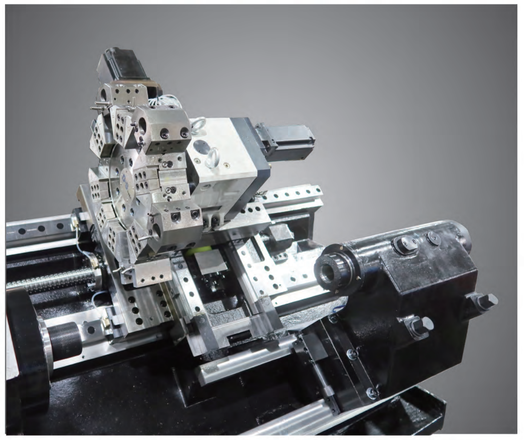
Hydraulic servo turret

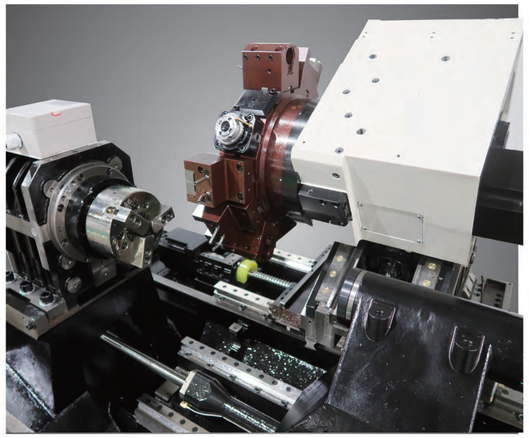
Motor servo turret (Power turret)

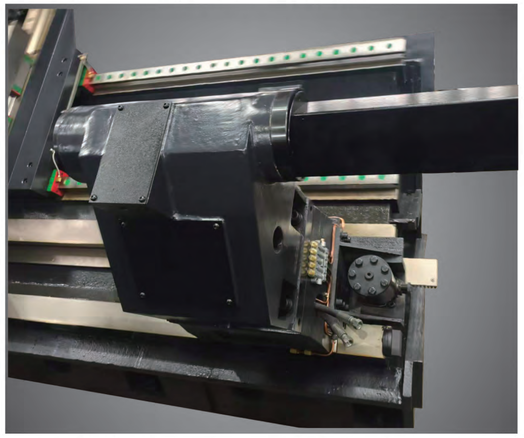
Hydraulic programmable tailstock

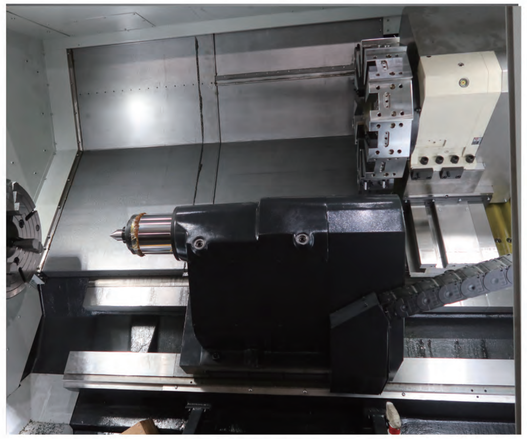
Hydraulic tailstock

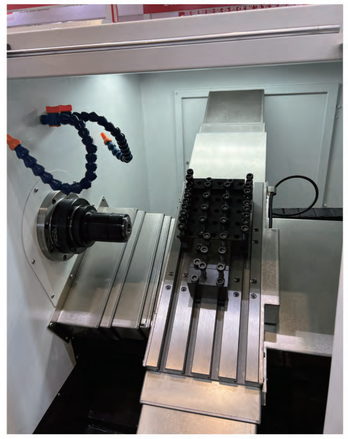
Gang tool

Interpolated Y-axis (Virtual Y-axis)

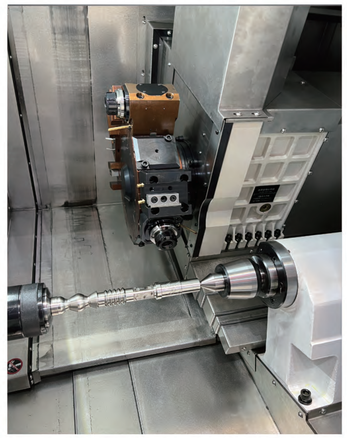
Real Y-axis (Hard Y-axis)

Main Configurations (Standard & Optional)

RENISHAW HPMA high precision motorised arm

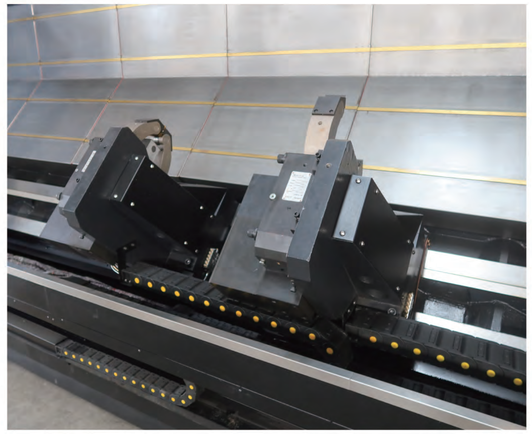
Hydraulic steady rest

Chip conveyor

Oil mist collector

Oil skimmer

Parts conveyor

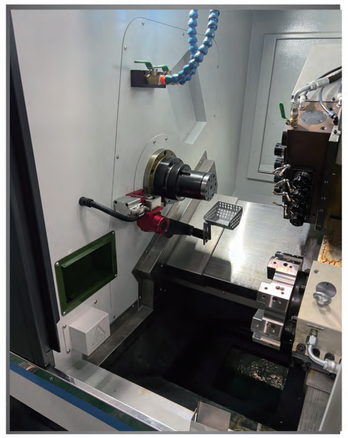
Parts catcher

Main Configurations (Standard & Optional)

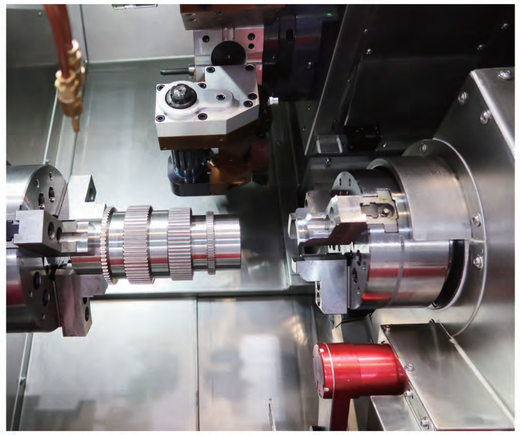

Saw blade live tool head

Tool holders

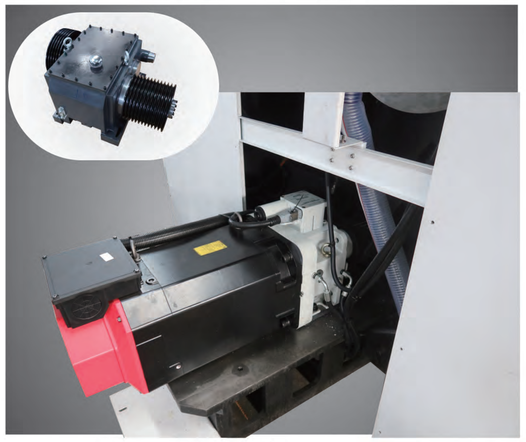

BF gear box

Various colors available

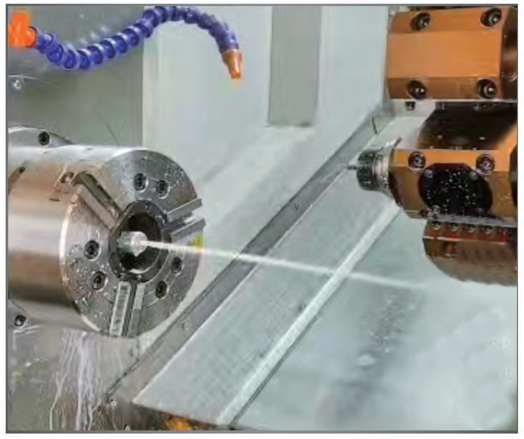

Through spindle coolant (TSC)

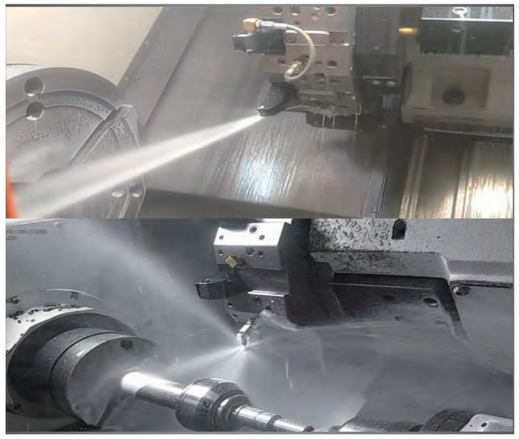

Through tool coolant (TTC)

Bar Feeders

A bar feeder is an automatic feeding device specially designed for CNC lathes.
It automatically and accurately feeds long metal bars into the lathe, enabling unmanned, continuous and automatic machining.
It greatly improves production efficiency, ensures feeding accuracy, and enhances product consistency, which is ideal for mass production and automated production lines.

BF-65T

BF-65T Features:
1. Full-electric servo drive
2. Simple operation. Suitable for all brand CNC lathes.
3. Quick installation and dismounting
4. V-channel lifting unloading design: Direct bar lifting into V-channel during changeover, quieter and more stable.
5. Adjustable bed foot height
6. Optional: Extension spindle supporter; X/Z axis retraction system.

BF-65B

BF-80B

BF-80B Features:
1. Increases speed and accuracy for CNC lathe.
2. Servo feeding system. Fast and accurate.
3. Full electrical control mechanical driving transmission, no air required.
4. External LED display, easier to monitor feeding situation.

BF-105L

BF-105L Features:
1. Full-electric servo drive
2. Photoelectric sensor
3. Vertical loading systems
4. Optional: Extension spindle supporter; X/Z axis retraction system.

MODEL	Bar dia.(mm)	Bar length(mm)	Weight(kg)
BF–65B	5–65	1500	280
BF–65L	5–65	1300; 1600	210/225
BF–65T	5–65	1250; 1500	310/340
BF–80B	5–80	1200; 1500; 1800	400/450/500
BF–105L	5–105	1600	255

Gantry Loader for CNC Lathes

Gantry loading systems have become increasingly popular in automated machining, delivering unmatched efficiency and reliability for CNC turning centers.
By seamlessly integrating with lathes, these systems enable 24/7 unattended operation, drastically reducing manual handling and cycle times while boosting production output.

Key advantages include:

1. **High–speed material handling:**Fast, precise loading/unloading of workpieces
2. **Flexible compatibility:** Adapts to bar stock, chuck parts, and various workpiece sizes
3. **Stable & durable:** Robust structure ensures consistent performance in high-volume production
4. **Space–saving design:** Optimized layout to fit seamlessly with your existing CNC lathe setup

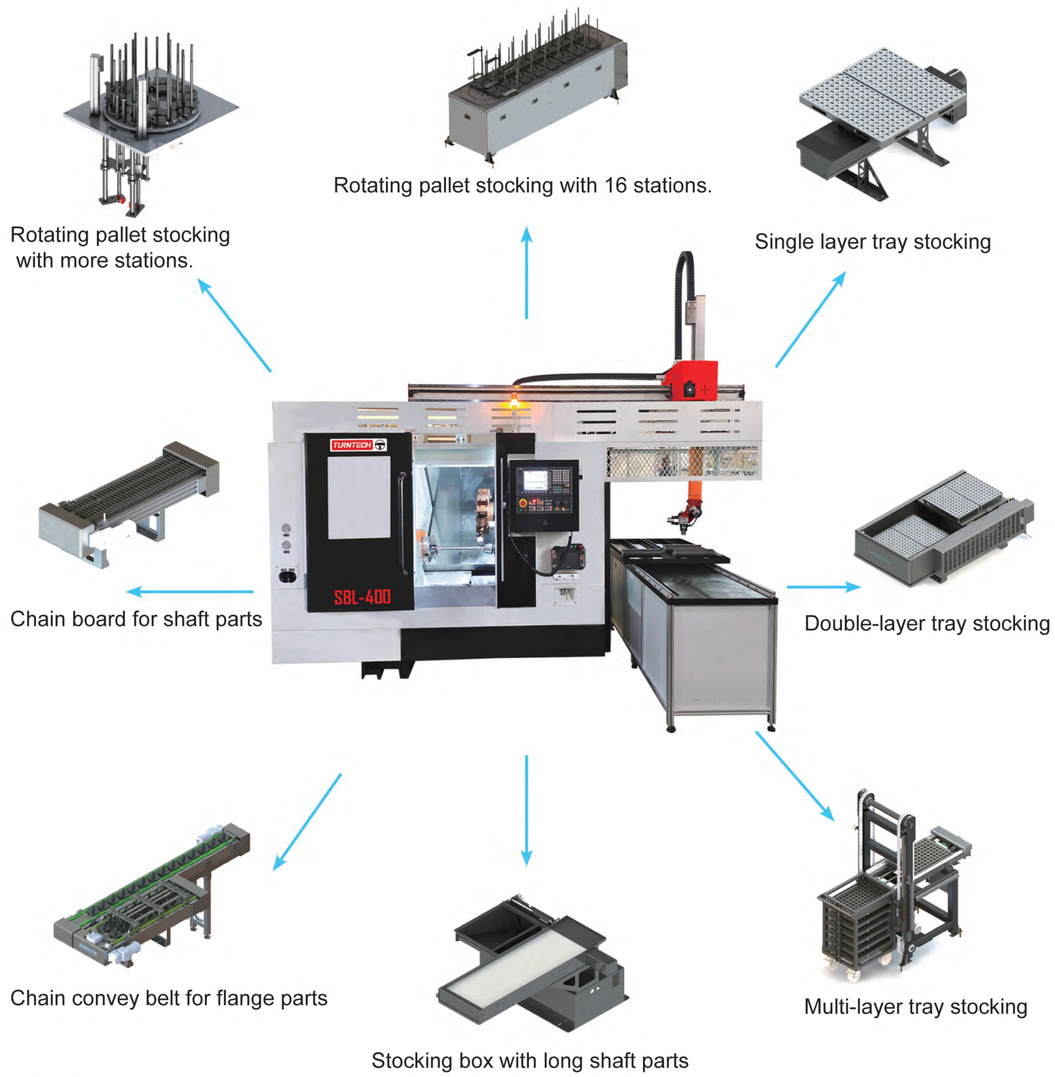

Gantry Loader for CNC Lathes

Industrial Robots

Driven by smart manufacturing trends, the integration of industrial robots with CNC lathes has become increasingly prevalent, serving as a core configuration for high-volume, efficient production.
Robots replace manual labor to perform workpiece loading, unloading, clamping, flipping, and handling, enabling 24/7 unattended operation. This drastically reduces idle time, boosts machine utilization, and eliminates human errors to ensure consistent precision and product quality.

1. **Flexible & efficient:** Adapts to shafts, discs, and other workpieces, with quick task switching; one robot can tend multiple lathes
2. **Stable & reliable:** High-precision repetitive positioning (±0.05mm), robust structure for long-hour continuous operation
3. **Seamless integration:** Full communication with CNC systems for end-to-end automation and production data traceability
4. **Cost–effective:** Replaces high-risk repetitive work, optimizes cycle times, and significantly reduces labor and time costs

Electrical cabinet

Teach pendant

Industrial Robots

RH-6 RH-10 RH-20 / RH30

MODEL		UNIT	RH–6	RH–10	RH–20	RH–30
Payload		kg	6	10	20	30
Reach		mm	1020	1500	1850	1850
Number of axes			6	6	6	6
Mounting type			Ground, bracket, ceiling	Ground, bracket, ceiling	Ground, bracket, ceiling	Ground, bracket, ceiling
Ambient temperature		° C	5 –45	5–45	5–45	5–45
Repeatability		mm	± 0.05	± 0.05	± 0.05	± 0.05
Max. motion range	Axis 1	°	± 165	± 165	± 165	± 165
	Axis 2	°	+120/–60	+100/–58	+120/–60	+88/–60
	Axis 3	°	+62/–80	+85/–100	+60/–130	+60/–88
	Axis 4	°	+175/–140	± 175	± 175	± 175
	Axis 5	°	+30/–205	+30/–215	+30/–215	+30/–215
	Axis 6	°	± 360°	± 360°	± 360°	± 360°
Max. speed	Axis 1	° /sec	225	148	148	148
	Axis 2	° /sec	225	148	148	148
	Axis 3	° /sec	225	148	148	148
	Axis 4	° /sec	225	222	222	222
	Axis 5	° /sec	225	222	222	222
	Axis 6	° /sec	225	375	375	222
Weight		kg	63	138.5	226.5	250